MDR-IF5000

SERVICE MANUAL

Ver 1.2 2004. 03

US Model
Canadian Model
AEP Model
UK Model
E Model

- MDR-IF5000 is the component model block one in MDR-DS5000.

COMPONENT MODEL NAME FOR MDR-DS5000

DIGITAL SURROUND PROCESSOR	DP-IF5000
CORDLESS STEREO HEADPHONES	MDR-IF5000

SPECIFICATIONS

Modulation System	Frequency modulation
Carrier wave frequency	Right channel 2.8 MHz Left channel 2.3 MHz
Frequency response	12 – 24,000 Hz
Power requirements	Rechargeable Ni-Cd batteries (supplied) or R6 (size AA) batteries (dry-cell or rechargeable, sold separately)
Mass	Approx. 280 g (including the supplied rechargeable Ni-Cd batteries)

Design and specifications are subject to change without notice.

Notes on Chip Component Replacement

- Never reuse a disconnected chip component.
- Notice that the minus side of a tantalum capacitor may be damaged by heat.

CORDLESS STEREO HEADPHONES

9-924-998-13
2004C04-1
© 2004. 03

Sony Corporation
Personal Audio Company
Published by Sony Engineering Corporation

SONY®

Inserting the batteries in the headphones

As shown in the illustration below, insert the two supplied rechargeable Ni-Cd batteries with the ⊕ and ⊖ ends in the correct direction.

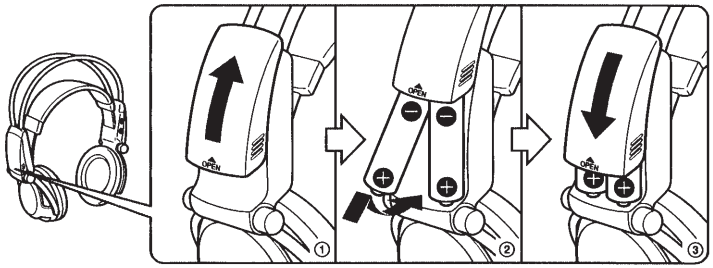

When using optional batteries

You can use R6 (size AA) dry-cell batteries, Sony R6 (size AA) Ni-Cd batteries (NC-AA, NC-AAS), and R6 (size AA) nickel-hydrium batteries (NH-AA) with the headphones. Insert the batteries as shown above.

Usage times for dry-cell batteries

Battery type	Usage time
Sony Alkaline Battery LR6/AM3 (N)	Approx. 90 hours
Sony Manganese Battery R6P/SUM-3 (NS)	Approx. 45 hours

Usage times and charging times for Sony rechargeable batteries (sold separately)

Battery type	Usage time	Charging time*
Sony R6 (size AA) Ni-Cd Battery NC-AA (700 mAh)	Approx. 30 hours	Approx. 6 hours
Sony R6 (size AA) Ni-Cd Battery NC-AAS (1000 mAh)	Approx. 40 hours	Approx. 9 hours
Sony R6 (size AA) Nickel-hydrium Battery NH-AA (1450 mAh)	Approx. 60 hours	Approx. 10 hours

* Time to fully charge the battery when it is completely drained.

(Continued)

How to attach the battery cover when it has come off

As shown in the illustration, align Ⓐ with Ⓐ, and Ⓑ with Ⓑ, and then attach the cover in place.

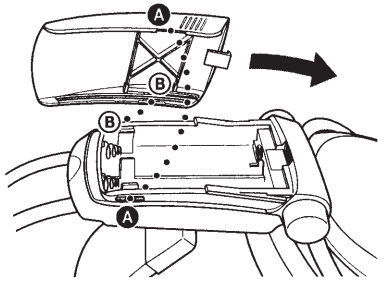

When charging R03 (size AAA) batteries

The supplied battery charger can also charge Sony R03 (size AAA) Ni-Cd batteries (NC-AAA) and R03 (size AAA) nickel-hydrium batteries (NH-AAA).
When charging R03 (size AAA) batteries, push down the adjuster on the battery charger.
When charging R6 (size AA) batteries, flip up the adjuster.

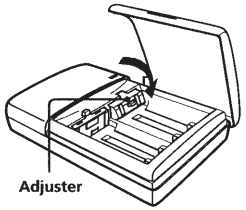

Charging times for R03 (size AAA) rechargeable batteries

Battery type	Charging time*
Sony R03 (size AAA) Ni-Cd Battery NC-AAA (250 mAh)	Approx. 5 hours
Sony R03 (size AAA) Nickel-hydrium Battery NH-AAA (650 mAh)	Approx. 10 hours

* Time to fully charge the battery when it is completely drained.

Notes

- The supplied battery charger can charge Sony R6 (size AA) Ni-Cd batteries (NC-AA, NC-AAS) and Sony R6 (size AA) nickel-hydrium batteries (NH-AA). Never attempt to charge other types of rechargeable batteries or dry-cell batteries.
- Do not use Sony R6 (size AA) Ni-Cd batteries (NC-AA (HJ)).
- The Ni-Cd batteries should be replaced with new ones when they last only half the expected time when fully charged. Purchase either Sony R6 (size AA) Ni-Cd batteries (NC-AA, NC-AAS) or Sony R6 (size AA) nickel-hydrium batteries (NH-AA). You can order the batteries from the store where you made the purchase or at your nearest Sony dealer.

This section is extracted from instruction manual.

Adjust the volume.

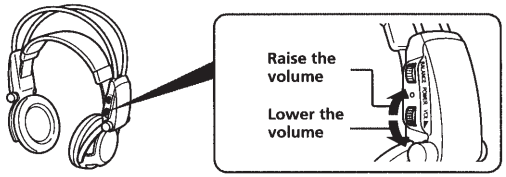

To adjust the volume of headphones (sold separately) connected to the PHONES jack

Turn PHONES—LEVEL to adjust the volume.

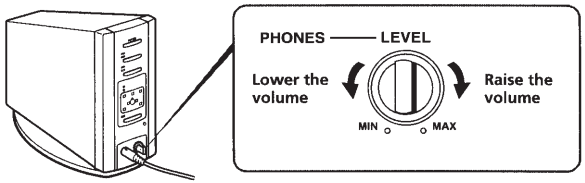

(Continued)

Adjust the balance.

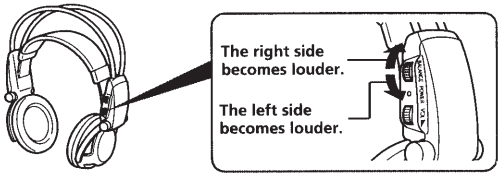

The headphones automatically turn off when they are taken off — Auto Power On/Off Function

When not using the headphones, be sure that the self-adjusting band is no longer pulled up. The power stays on when the self-adjusting band is pulled up.

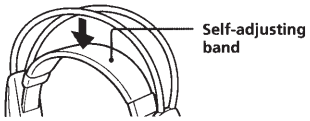

To check the remaining battery power

Pull up the self-adjusting band and check the POWER indicator. The batteries can be used when the POWER indicator lights red. Charge the batteries or use dry-cell batteries if the POWER indicator is faint, the sound is distorted, or increased noise occurs.

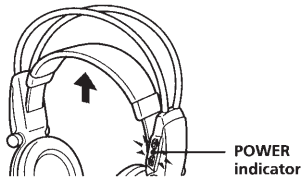

After using the headphone system

Turn off the digital surround processor first before turning off the component connected to the digital surround processor. If you turn off the connected component first, the infrared beam is cut off and noise may be emitted (this is not a malfunction). Do not hang the headphones on the digital surround processor or other components. The Auto Power On Function may be inadvertently activated, using up the batteries.

Transition time between modes

When pressing buttons on the digital surround processor to change to new modes, the transition time between modes may vary. This is due to differences in program transmission between modes.

SECTION 2
DISASSEMBLY

• The equipment can be removed using the following procedure.

Set → Frame assy → Hanger (L) → Band Assy, Head

Set → Frame assy → Hanger (R) → RX board → Band Assy, Head

Note : Follow the disassembly procedure in the numerical order given.

2-1. FRAME ASSY

• Remove the left and right ear pads in the same manner.

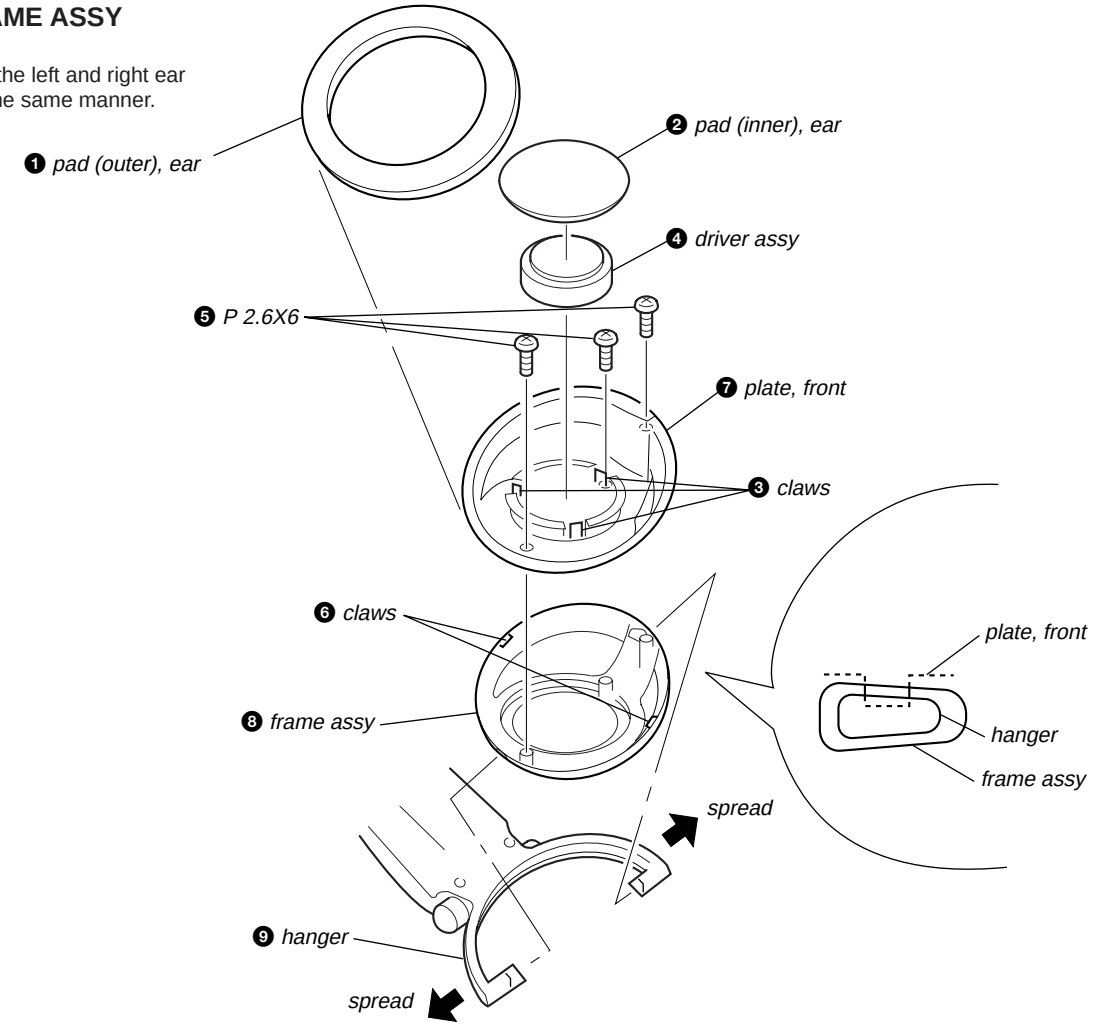

2-2. HANGER (L)

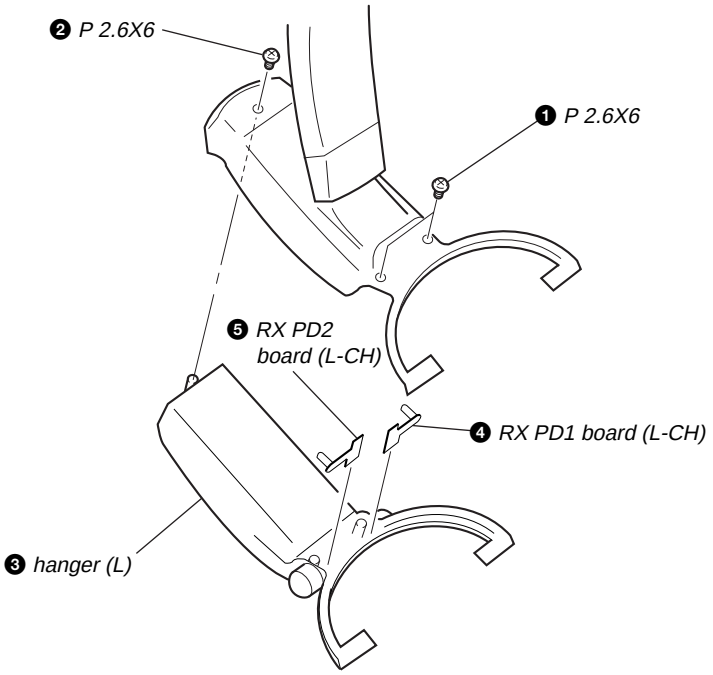

2-3. HANGER (R)

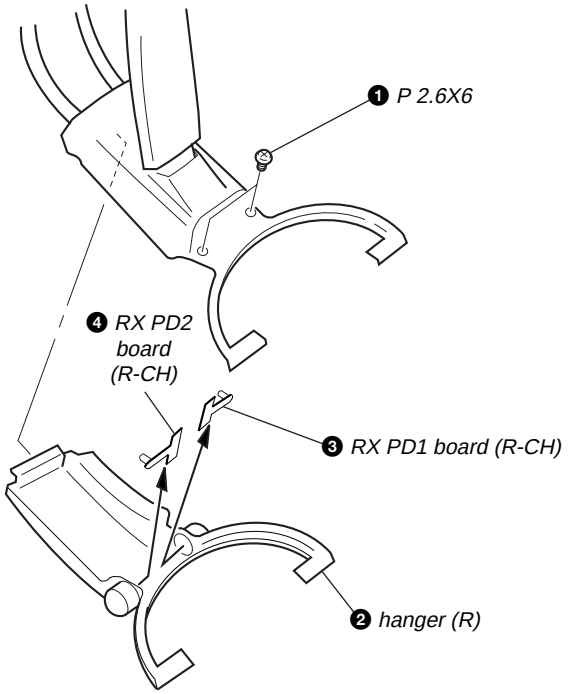

2-4. RX BOARD

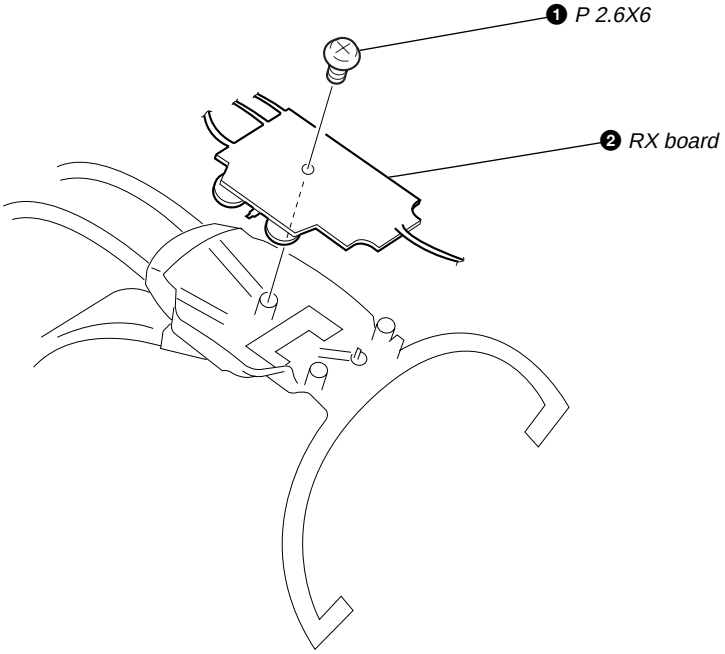

2-5. BAND ASSY, HEAD

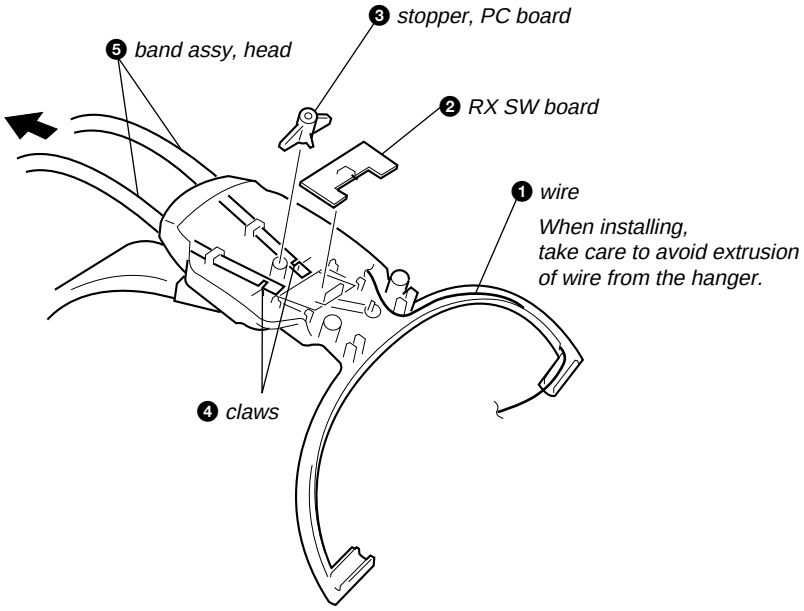

SECTION 3
ELECTRICAL ADJUSTMENTS

Notes:

1. These adjustments are performed in the order that they are discribed.
2. Adjustment and measurement are performed for each channel unless otherwise specified.
3. Adjustment is made for right channel first and then the left channel.
4. The power voltage at the headphones section is supplied with 1.2 V.
5. The processor section is used as jig to adjust the headphones section (MDR-IF5000).
6. Adjustment is made with the RX SW board and RX PD1 and RX PD2 boards (for both L-ch and R-ch) connected to the RX board with wires (normal part).

0 dB=0.775 V

Tuning Adjustment

Preparation:

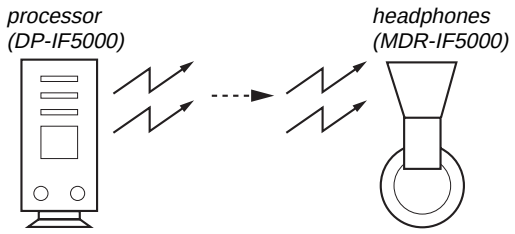

1. Set the processor section (DP-IF5000) in test mode and operate the set to generate a signal of 1 kHz and –10 dB. (Refer to DP-IF5000 service manual page 7.)
2. Supply 1.2 V to between VCC and ground on the RX board.
3. Adjust RV11 (volume control) on the RX board to the minimum level.

Setting:

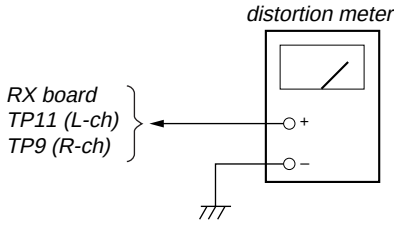

1. Connect a distortion meter to TP11 (L-ch) and TP9 (R-ch) on the RX board.
2. Adjust L34 and 35 for L-ch and L54 and 55 for R-ch on the RX board so that the reading on the distortion meter is minimized.

Adjustment Location:

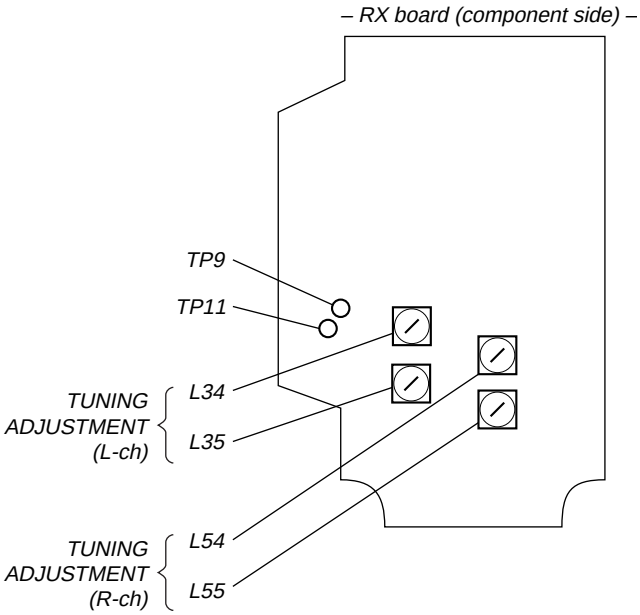

SECTION 4
DIAGRAMS

4-1. BLOCK DIAGRAM

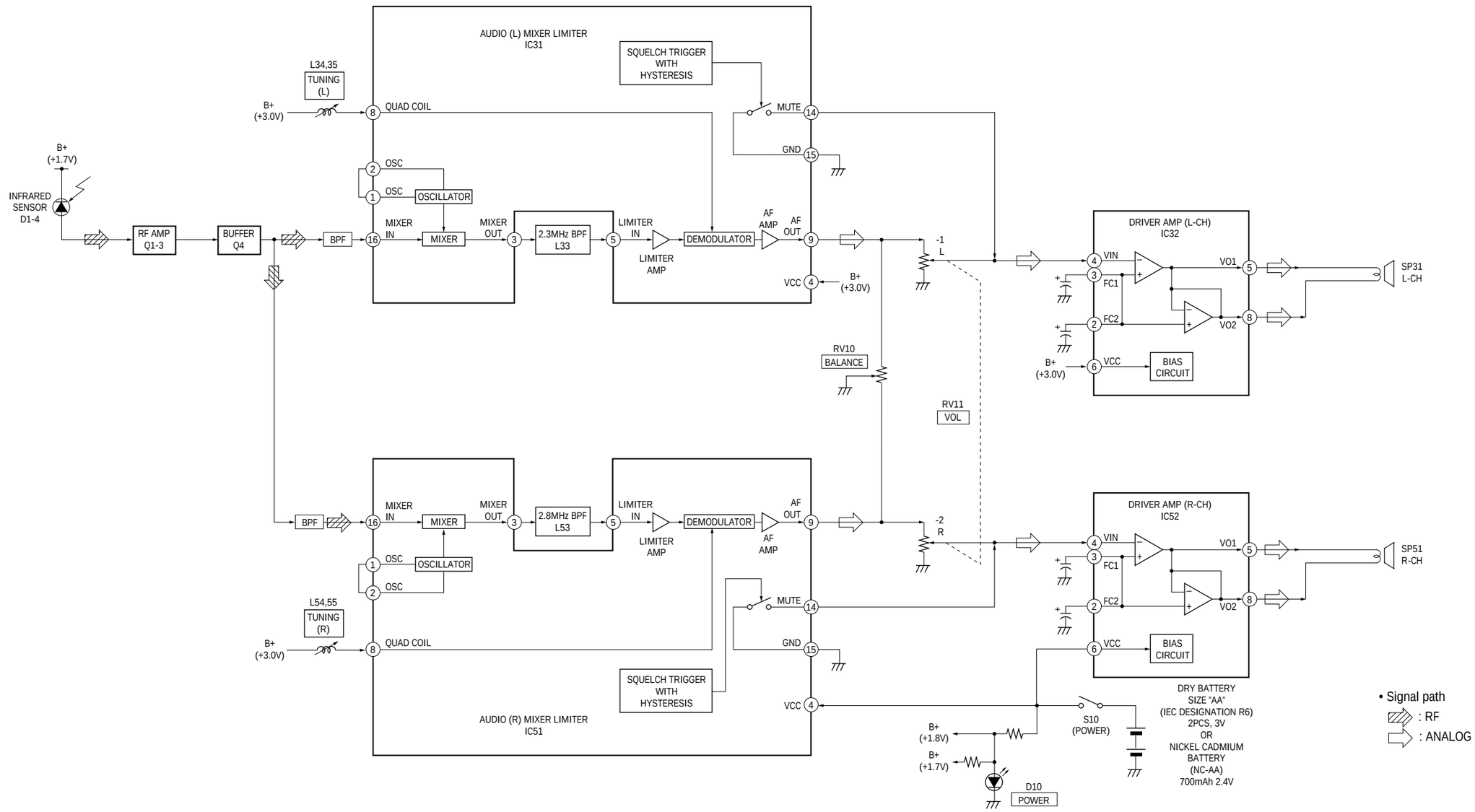

04

4-2. PRINTED WIRING BOARDS

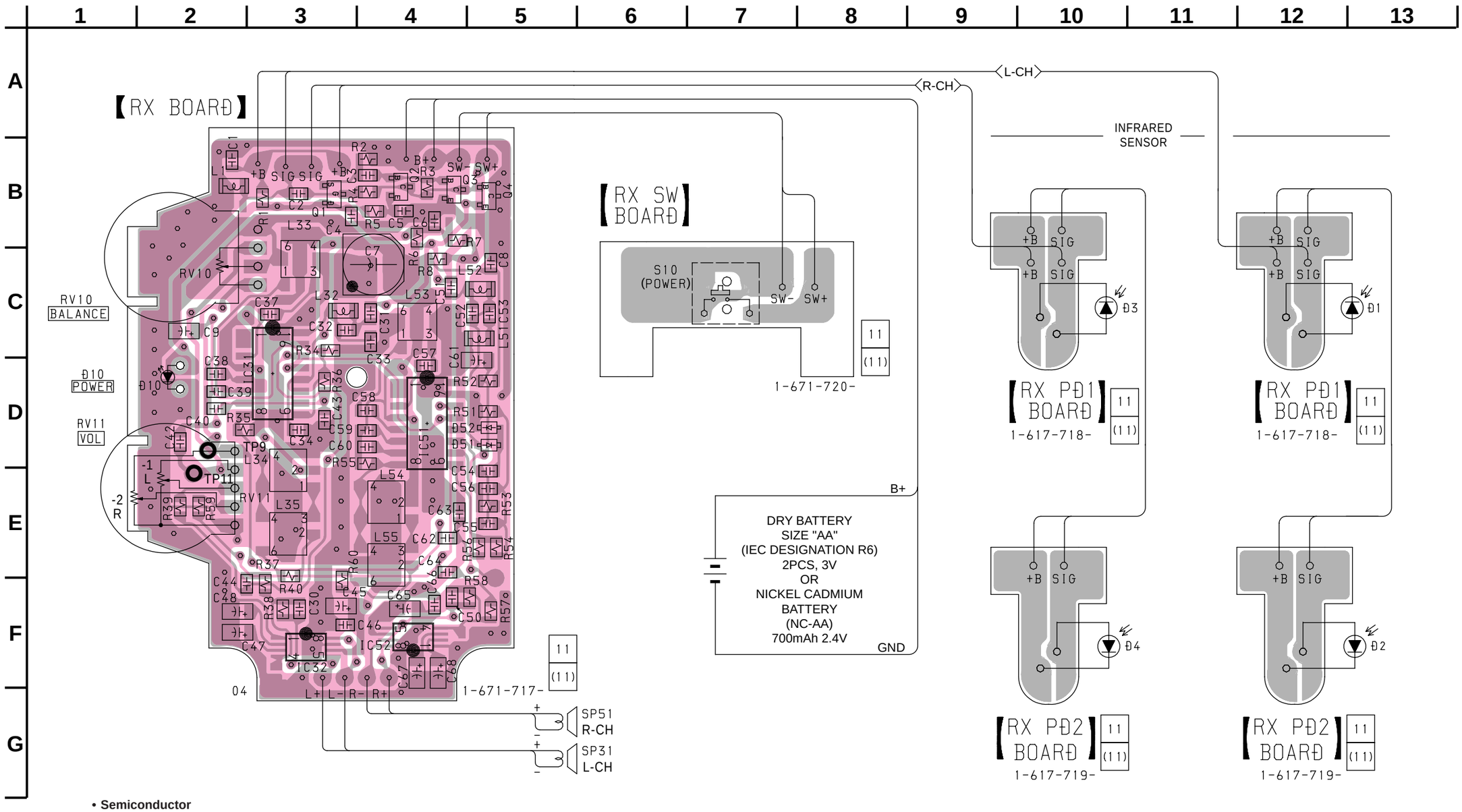

• **Semiconductor Location**

Ref. No.	Location
D1	C-13
D2	F-13
D3	C-10
D4	F-10
D10	D-2
D51	D-5
D52	D-5
IC31	D-3
IC32	F-3
IC51	D-4
IC52	F-4
Q1	B-3
Q2	B-4
Q3	B-4
Q4	B-5

Note:
- ○——— : parts extracted from the component side.
- ○ : Through hole.
- : Pattern from the side which enables seeing.
- : Pattern of the rear side.

4-3. SCHEMATIC DIAGRAM • Refer to page 13 for IC Block Diagrams.

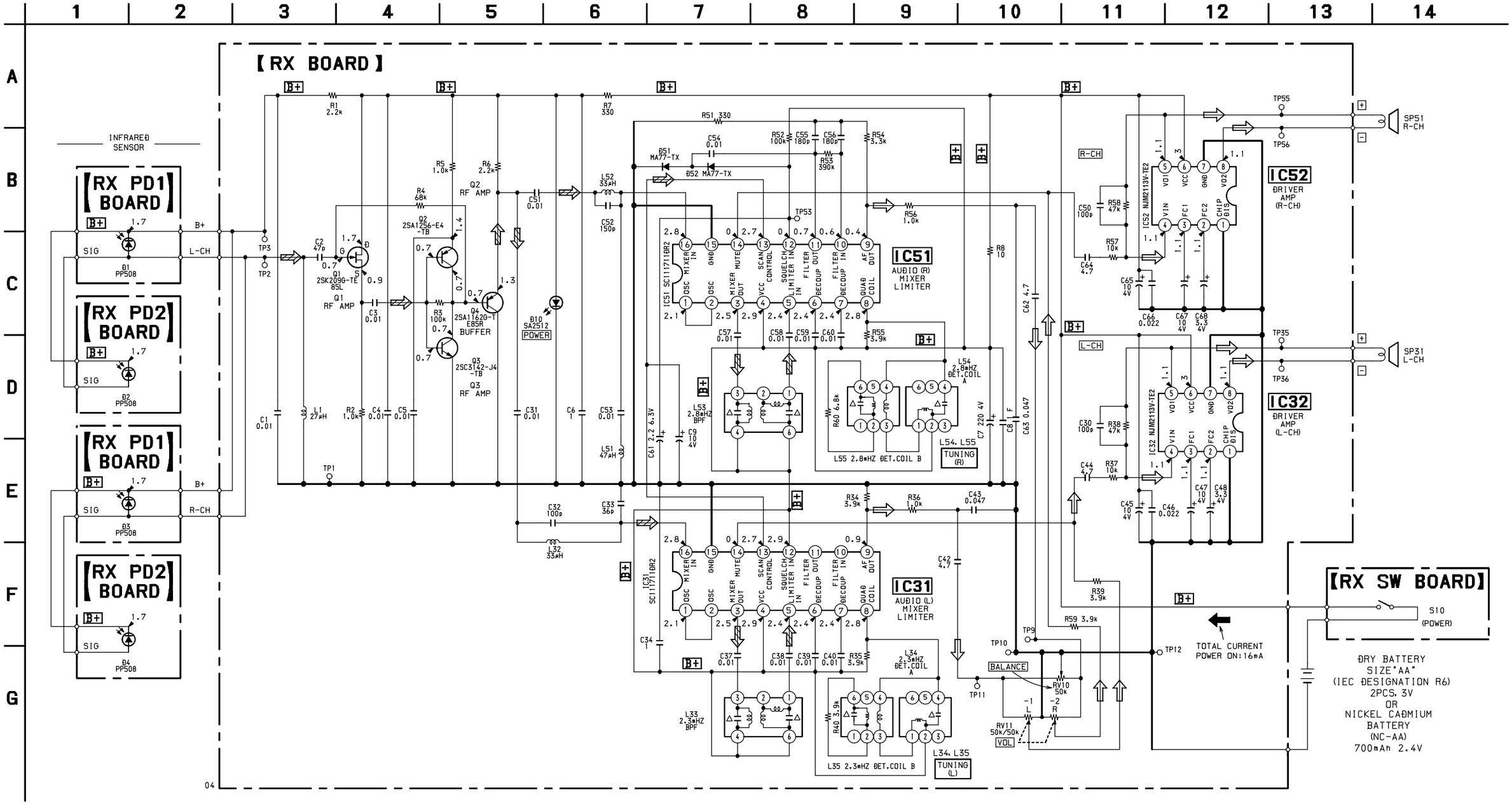

Note:

- All capacitors are in µF unless otherwise noted. pF: µµF 50 WV or less are not indicated except for electrolytics and tantalums.
- All resistors are in Ω and 1/4 W or less unless otherwise specified.
- △ : internal component.
- ▭ : panel designation.
- B+ : B+ Line.
- ▭ : adjustment for repair.
- Power voltage is dc 3 V and fed with regulated dc power supply from battery terminal.
- Total current is measured with POWER ON (no-signal) mode.
- Voltage is dc with respect to ground under no-signal condition.
  no mark : POWER ON
- Voltages are taken with a VOM (Input impedance 10 MΩ). Voltage variations may be noted due to normal production tolerances.
- Signal path.
  ⇨ : RF
  ⇨ : ANALOG

• IC Block Diagrams

IC31, 51 SC111711DR2

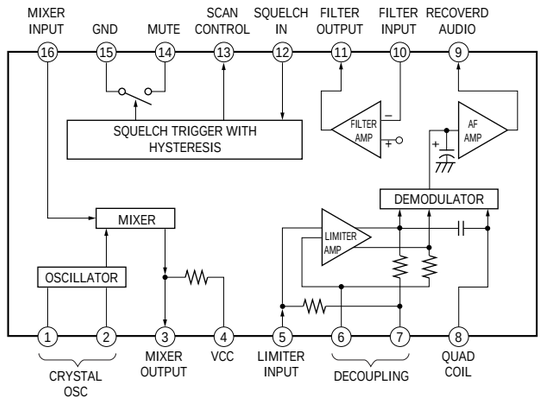

IC32, 52 MC34119DTBEL

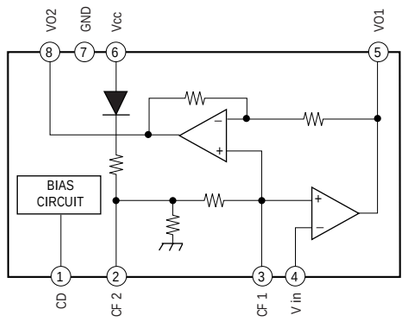

SECTION 5
EXPLODED VIEW

NOTE:
- The mechanical parts with no reference number in the exploded views are not supplied.
- Items marked "*" are not stocked since they are seldom required for routine service. Some delay should be anticipated when ordering these items.
- -XX and -X mean standardized parts, so they may have some difference from the original one.
- Color Indication of Appearance Parts
  Example :
  KNOB, BALANCE (WHITE) ... (RED)
  ↑ Parts Color ↑ Cabinet's Color

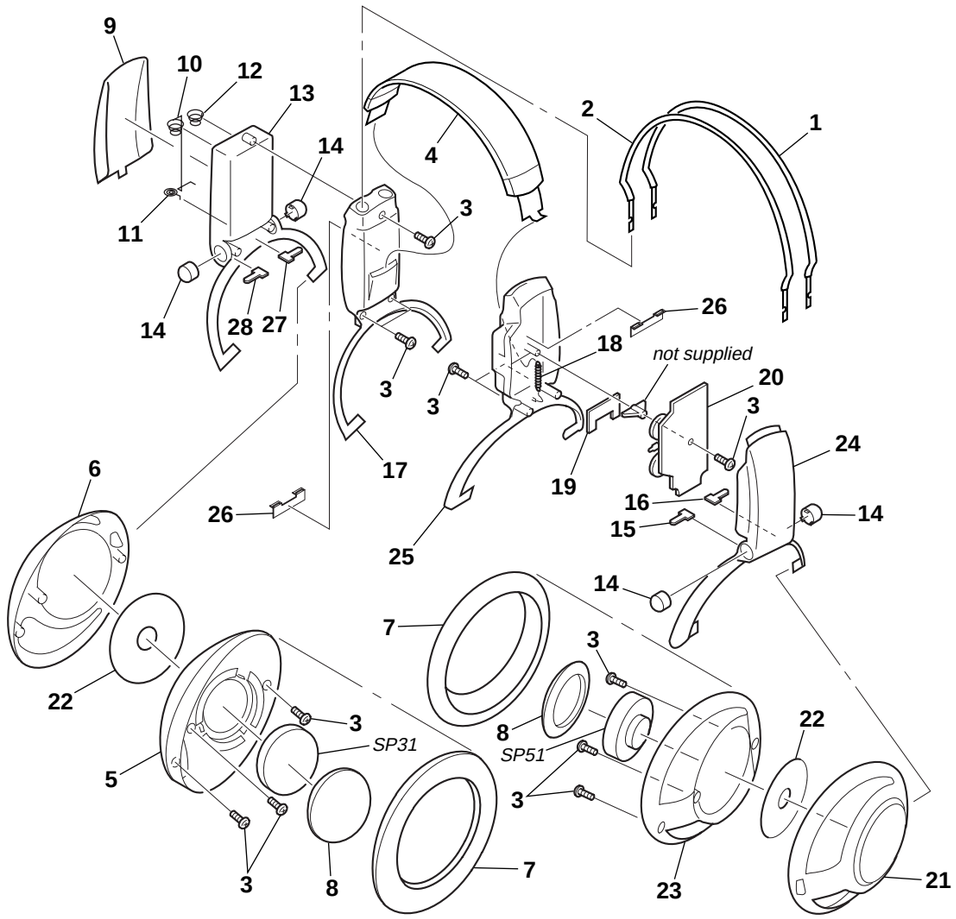

Ref. No.	Part No.	Description	Remark
1	X-4951-063-1	BAND (F) ASSY, HEAD	
2	X-4951-064-1	BAND (R) ASSY, HEAD	
3	7-685-104-19	SCREW +P 2X6 TYPE2 NON-SLIT	
4	X-4951-014-1	SUSPENDER ASSY	
5	4-213-919-01	PLATE (L), FRONT	
6	X-4950-548-1	FRAME (L) ASSY	
7	4-213-911-01	PAD (OUTER), EAR	
8	4-213-910-01	PAD (INNER), EAR	
9	4-213-900-01	LID, BATTERY	
10	4-961-876-01	TERMINAL (COMMONNESS), BATTERY	
11	4-214-464-01	TERMINAL, (-) BATTERY	
12	4-961-874-01	TERMINAL, (+) BATTERY	
13	4-213-896-01	HANGER (L)	
14	4-213-901-01	WINDOW, RAY CATCHER	
* 15	1-671-718-11	RX PD1 BOARD (L-CH)	
* 16	1-671-719-11	RX PD2 BOARD (L-CH)	
17	X-4951-066-1	LID (L) ASSY, HANGER	
18	4-213-918-01	SPRING, TENSION	
* 19	1-671-720-11	RX SW BOARD	
* 20	A-4542-557-A	RX BOARD, COMPLETE	
21	X-4950-549-1	FRAME (R) ASSY	
22	4-213-916-01	SCREEN	
23	4-213-920-01	PLATE (R), FRONT	
24	4-213-897-01	HANGER (R)	
25	4-213-899-01	LID (R), HANGER	
26	4-215-827-01	STOPPER, BAND	
* 27	1-671-718-11	RX PD1 BOARD (R-CH)	
* 28	1-671-719-11	RX PD2 BOARD (R-CH)	
SP31	X-4951-065-1	DRIVER ASSY (L-CH)	
SP51	X-4951-065-1	DRIVER ASSY (R-CH)	

SECTION 6
ELECTRICAL PARTS LIST

NOTE:
- Due to standardization, replacements in the parts list may be different from the parts specified in the diagrams or the components used on the set.
- -XX and -X mean standardized parts, so they may have some difference from the original one.
- RESISTORS
  All resistors are in ohms.
  METAL:Metal-film resistor.
  METAL OXIDE: Metal oxide-film resistor.
  F:nonflammable
- Items marked "*" are not stocked since they are seldom required for routine service. Some delay should be anticipated when ordering these items.
- SEMICONDUCTORS
  In each case, u : µ, for example:
  uA.. : µA.. uPA.. : µPA..
  uPB.. : µPB.. uPC.. : µPC.. uPD.. : µPD..
- CAPACITORS
  uF : µF
- COILS
  uH : µH

When indicating parts by reference number, please include the board.

Ref. No.	Part No.	Description			Remark
*	A-4542-557-A	RX BOARD, COMPLETE			
		**********			
		< CAPACITOR >			
C1	1-163-031-11	CERAMIC CHIP	0.01uF		50V
C2	1-163-243-11	CERAMIC CHIP	47PF	5%	50V
C3	1-163-031-11	CERAMIC CHIP	0.01uF		50V
C4	1-163-031-11	CERAMIC CHIP	0.01uF		50V
C5	1-163-031-11	CERAMIC CHIP	0.01uF		50V
C6	1-164-346-11	CERAMIC CHIP	1uF		16V
C7	1-126-246-11	ELECT CHIP	220uF	20%	4V
C8	1-164-346-11	CERAMIC CHIP	1uF		16V
C9	1-135-201-11	TANTALUM CHIP	10uF	20%	4V
C30	1-163-117-00	CERAMIC CHIP	100PF	5%	50V
C31	1-163-021-11	CERAMIC CHIP	0.01uF	10%	50V
C32	1-163-251-11	CERAMIC CHIP	100PF	5%	50V
C33	1-163-106-00	CERAMIC CHIP	36PF	5%	50V
C34	1-164-346-11	CERAMIC CHIP	1uF		16V
C37	1-163-031-11	CERAMIC CHIP	0.01uF		50V
C38	1-163-031-11	CERAMIC CHIP	0.01uF		50V
C39	1-163-031-11	CERAMIC CHIP	0.01uF		50V
C40	1-163-031-11	CERAMIC CHIP	0.01uF		50V
C42	1-117-720-11	CERAMIC CHIP	4.7uF		10V
C43	1-163-809-11	CERAMIC CHIP	0.047uF	10%	25V
C44	1-117-720-11	CERAMIC CHIP	4.7uF		10V
C45	1-135-201-11	TANTALUM CHIP	10uF	20%	4V
C46	1-163-033-11	CERAMIC CHIP	0.022uF		50V
C47	1-135-201-11	TANTALUM CHIP	10uF	20%	4V
C48	1-135-180-21	TANTALUM CHIP	3.3uF	20%	6.3V
C50	1-163-117-00	CERAMIC CHIP	100PF	5%	50V
C51	1-163-021-11	CERAMIC CHIP	0.01uF	10%	50V
C52	1-163-121-00	CERAMIC CHIP	150PF	5%	50V
C53	1-163-031-11	CERAMIC CHIP	0.01uF		50V
C54	1-163-031-11	CERAMIC CHIP	0.01uF		50V
C55	1-163-123-00	CERAMIC CHIP	180PF	5%	50V
C56	1-163-123-00	CERAMIC CHIP	180PF	5%	50V
C57	1-163-031-11	CERAMIC CHIP	0.01uF		50V
C58	1-163-031-11	CERAMIC CHIP	0.01uF		50V
C59	1-163-031-11	CERAMIC CHIP	0.01uF		50V
C60	1-163-031-11	CERAMIC CHIP	0.01uF		50V
C61	1-135-149-21	TANTALUM CHIP	2.2uF	20%	10V
C62	1-117-720-11	CERAMIC CHIP	4.7uF		10V
C63	1-163-809-11	CERAMIC CHIP	0.047uF	10%	25V
C64	1-117-720-11	CERAMIC CHIP	4.7uF		10V
C65	1-135-201-11	TANTALUM CHIP	10uF	20%	4V
C66	1-163-033-11	CERAMIC CHIP	0.022uF		50V
C67	1-135-201-11	TANTALUM CHIP	10uF	20%	4V
C68	1-135-180-21	TANTALUM CHIP	3.3uF	20%	6.3V
		< DIODE >			
D10	8-719-066-57	LED SA2512 (POWER)			
D51	8-719-421-40	DIODE MA77			
D52	8-719-421-40	DIODE MA77			
		< IC >			
IC31	8-759-473-72	IC SC111711DR2			
IC32	8-759-347-33	IC NJM2113V-TE2			
IC51	8-759-473-72	IC SC111711DR2			
IC52	8-759-347-33	IC NJM2113V-TE2			
		< COIL >			
L1	1-412-956-21	INDUCTOR	27uH		
L32	1-412-957-11	INDUCTOR	33uH		
L33	1-239-762-11	FILTER, BAND PASS			
L34	1-416-885-11	COIL, DETECTION (A)			
L35	1-416-886-11	COIL, DETECTION (B)			
L51	1-412-959-11	INDUCTOR	47uH		
L52	1-412-957-11	INDUCTOR	33uH		
L53	1-239-763-11	FILTER, BAND PASS			
L54	1-416-887-11	COIL, DETECTION (A)			
L55	1-416-888-11	COIL, DETECTION (B)			
		< TRANSISTOR >			
Q1	8-729-220-93	FET 2SK209-G			
Q2	8-729-024-13	TRANSISTOR 2SA1256E4			
Q3	8-729-809-77	TRANSISTOR 2SC3142-J4			
Q4	8-729-216-22	TRANSISTOR 2SA1162-G			
		< RESISTOR >			
R1	1-216-057-00	METAL CHIP	2.2K	5%	1/10W
R2	1-216-049-11	RES,CHIP	1K	5%	1/10W
R3	1-216-097-00	RES,CHIP	100K	5%	1/10W
R4	1-216-093-00	RES,CHIP	68K	5%	1/10W
R5	1-216-049-11	RES,CHIP	1K	5%	1/10W
R6	1-216-057-00	METAL CHIP	2.2K	5%	1/10W
R7	1-216-037-00	METAL CHIP	330	5%	1/10W
R8	1-216-001-00	METAL CHIP	10	5%	1/10W
R34	1-216-063-00	RES,CHIP	3.9K	5%	1/10W
R35	1-216-063-00	RES,CHIP	3.9K	5%	1/10W

RX **RX PD1** **RX PD2** **RX SW**

Ref. No.	Part No.	Description			Remark
R36	1-216-049-11	RES,CHIP	1K	5%	1/10W
R37	1-216-073-00	METAL CHIP	10K	5%	1/10W
R38	1-216-089-00	RES,CHIP	47K	5%	1/10W
R39	1-216-063-00	RES,CHIP	3.9K	5%	1/10W
R40	1-216-063-00	RES,CHIP	3.9K	5%	1/10W
R51	1-216-037-00	METAL CHIP	330	5%	1/10W
R52	1-216-097-00	RES,CHIP	100K	5%	1/10W
R53	1-216-111-00	METAL CHIP	390K	5%	1/10W
R54	1-216-061-00	METAL CHIP	3.3K	5%	1/10W
R55	1-216-063-00	RES,CHIP	3.9K	5%	1/10W
R56	1-216-049-11	RES,CHIP	1K	5%	1/10W
R57	1-216-073-00	METAL CHIP	10K	5%	1/10W
R58	1-216-089-00	RES,CHIP	47K	5%	1/10W
R59	1-216-063-00	RES,CHIP	3.9K	5%	1/10W
R60	1-216-069-00	METAL CHIP	6.8K	5%	1/10W
		< VARIABLE RESISTOR >			
RV10	1-223-516-11	RES, VAR, CARBON 50K (BALANCE)			
RV11	1-223-517-11	RES, VAR, CARBON 50K/50K (VOL)			

****

*	1-671-718-11	RX PD1 BOARD (L-CH)	
		**********	
		< PHOTO DIODE >	
D1	8-719-058-49	PHOTO DIODE PP508	

****

*	1-671-718-11	RX PD1 BOARD (R-CH)	
		**********	
		< PHOTO DIODE >	
D3	8-719-058-49	PHOTO DIODE PP508	

****

*	1-671-719-11	RX PD2 BOARD (L-CH)	
		**********	
		< PHOTO DIODE >	
D2	8-719-058-49	PHOTO DIODE PP508	

****

*	1-671-719-11	RX PD2 BOARD (R-CH)	
		**********	
		< PHOTO DIODE >	
D4	8-719-058-49	PHOTO DIODE PP508	

****

Ref. No.	Part No.	Description	Remark
*	1-671-720-11	RX SW BOARD	
		**********	
		< SWITCH >	
S10	1-572-467-61	SWITCH, PUSH (1 KEY) (POWER)	

****

		MISCELLANEOUS	
		**********	
SP31	X-4951-065-1	DRIVER ASSY (L-CH)	
SP51	X-4951-065-1	DRIVER ASSY (R-CH)	

MEMO

REVISION HISTORY

Clicking the version allows you to jump to the revised page.
Also, clicking the version at the upper on the revised page allows you to jump to the next revised page.

Ver.	Date	Description of Revision
1.0	1998. 11	New
1.1	1999. 02	US, Canadian, AEP and UK model addition.
1.2	2004. 03	Correction of IC32 and IC52. (SPM-04014)